HEAT SYSTEMS

Ansac HC – HK Series Carbon Regeneration Kiln

Supplementary Manual
Preventative Maintenance

info@heatsystems.com.au
heatsystems.com.au

info@heatsystems.com.au
heatsystems.com.au

HEAT SYSTEMS

Ansac HC – HK Series Carbon Regeneration Kiln

Supplementary Manual
Preventative Maintenance

Table of Contents

1 INTRODUCTION

This document is recommended to be used in addition to the Installation, Operation and Maintenance Manual provided by the original equipment manufacturer.

This document provides recommendations for improved operation and maintenance of the Ansac HC and HK series Carbon Regeneration kilns and associated equipment. It is based on the experiences and knowledge accumulated by Heat Systems technical staff during site visits to service, maintain and/or improve equipment on behalf of our clients.

1.1. Scope of Supply

The Ansac HC and HK series Carbon Regeneration kilns have been manufactured, supplied, and commissioned by the original equipment manufacturer (OEM). Over time the electrical control, fuel and process systems may have undergone numerous modifications by contractors and client representatives on site.

Heat Systems Group Pty Ltd endeavours to assist clients in reviewing their existing equipment and processes as part of the Heat Systems Continuous Improvement Policy to ensure the equipment is used as safely and efficiently as possible. This document is provided as part of that assistance process.

The Ansac HC and HK Series Carbon Regeneration kiln packages are usually comprised of the following main components:

HC or HK Series Carbon Regeneration kiln consisting:

- Sieve Bend screen (optional)
- Feed Hopper
- Dewatering pipescreen
- Pneumatic Slide gate
- Pre-dryer and fan
- Screw feeder
- Heat tube
- Heat tube couplings and seals
- Heat tube gearbox and motor
- Emergency drive gearbox and motor
- Burner system including controls
- Carbon discharge chamber
- Discharge Vibrating Sizing Screen (optional)
- Electrical control panel

1.2. Safety

The Ansac HC and HK Carbon Regeneration Kiln is an indirect fired appliance. The kiln was designed by the OEM to meet relevant Australian Standards.

Whilst originally designed to minimise operating and maintenance safety hazards, it is recommended that equipment should be operated in accordance with the instructions given in the OEM manual as well as any additional information contained in this document. Failure to follow the given instructions may result in equipment damage and possible injury to personnel.

WARNING - All Ansac HC and HK series kiln operators and maintenance personnel MUST read this section. The following items are important safety considerations and must be adhered to both before and during the use of the kiln.

1.2.1. Items of importance to remember when operating the Carbon Regeneration Kiln

a) All water outlets from the pipe screen and the feed screw must always have clean filtering screens to ensure maximum excess water removal from the carbon BEFORE introducing the carbon to the kiln.

b) Excess water MUST be removed from the carbon BEFORE the kiln operation. This is to prevent possible water ingress into the kiln combustion chamber which can happen by water migrating from the pre-dryer unit into the kiln combustion chamber. This water migration will damage the kiln seals and insulation. This excess water removal process is also required to prevent flooding of the heat tube which will use up the available heat and prevent proper carbon regeneration.

c) The quench tank water level must ALWAYS be approximately 200-300mm above the opening of the kiln discharge chute DURING KILN OPERATION. This level prevents air getting into the discharge chamber and heat tube of the kiln, which could result in carbon combustion, which could also cause severe damage to the kiln. This level also prevents the discharged carbon from “backing up” into the discharge chamber which in turn could damage the kiln seals and cause carbon migration from the discharge chamber into the combustion chamber resulting in uncontrollable carbon combustion which leads to significant damage to the insulation and the burners.

NOTE: If a discharge vibrating sizing screen is being used it is critical to ensure that the end of the kiln discharge chute remains below the water level of the infeed tray/weir of the vibrating screen.

d) An airtight seal is ALWAYS to be maintained at each end of the kiln DURING OPERATION to prevent fires in the heat tube.

1.2.2. Safety Requirements – Before Use

Before the kiln can be operated, the following considerations and actions must be adhered to in order to eliminate safety hazards:

a) **Fire Fighting Equipment:** Suitable fire fighting equipment needed to deal with either fuel or electrical fires must be located within 10 metres of the kiln and be regularly serviced and maintained;

b) **Training:** All personnel expected to operate the kiln must be provided with a copy of the manufacturers operating manual and trained by senior site staff. Each operator should then be signed off as competent in the operation of the kiln;

(c) **Labelling/Warnings:** All connecting items to the kiln (such as cabling and piping) should be correctly and clearly labelled.

1.2.3. Operational and Maintenance Safety Requirements

The following requirements and precautions must be adhered to by all site personnel that will be operating and maintaining the Ansac HC and HK series Carbon Regeneration Kiln.

a) **Housekeeping:** All areas around the kiln must be kept free of any trip hazards and all surfaces must be kept dry;

b) **Fuel:** The fuel lines on the kiln MUST be inspected regularly for leaks and any suspected leaks must be dealt with immediately. If any leak is suspected during kiln operation, the kiln should be shut down, the fuel should be isolated and the leak investigated and repaired;

c) **Hot Surfaces:** Some exposed surfaces of the kiln will be hot during and after kiln operation. All care must be taken to limit personnel coming into contact with these hot surfaces during these times. If access is required to the kiln whilst the surfaces are still hot, personnel protective equipment must be worn to limit personnel injury;

d) **Electrical Maintenance:** ONLY suitably qualified personnel should be allowed to conduct any electrical maintenance on the kiln. At NO time should any control mechanism be bridged, removed or overridden without express authority to do so;

e) **Mechanical Maintenance:** ONLY suitably qualified personnel should be allowed to conduct any mechanical maintenance on the kiln. At NO time should any mechanical items of the kiln be modified or removed without express authority to do so;

f) **Observations:** Like all machines, the Ansac HC and HK Carbon Regeneration Kilns are prone to mechanical failure from time to time. Operators are encouraged to conduct a pre-operational and operational review of the kiln mechanics and instrumentation during each run. If any issues arise that could have a detrimental impact on the kiln health, or end in possible personnel injury, the kiln must be shut down and repairs performed before the kiln can be put back into service;

g) **Power:** The Ansac HC and HK series kilns both have battery backup emergency drive to run the kiln heat tube whilst the kiln cools down in the case of loss of power. However, the mains power should NOT be disconnected from the kiln at any time whilst in operation, or during the cool down sequence so as to allow a safe shutdown;

h) **Signs and Labels:** All signs and labels on and around the kiln must be kept clean and in good order, especially those that relate to emergency and safety features.

2 CONNECTIONS

2.1. Connections to Main Kiln

Gaskets and Sealants

All flanges should be joined with the proper gasket material or sealant between the flange faces. The manufacturers recommended materials are as follows:

Gaskets

KLINGER SIL C4430 - 430ºC rated - BS7531 / 5146 / AGA208 fire safe

OR

KLINGER SIL C4500 - 450ºC rated - BS7531 / AP16FA & M7436 fire safe

Sealants

SILASTIC RTV 736 or equivalent - 316<degree sign>C rated / MIL-A-46106A

Fuel Connection

All standards associated with the fuel type must be adhered to with all fuel connections to the kilns. All fuel lines (both mains and to individual burners) must be leak tested at the time of fuel connection.

WARNING – Leak tests must be performed by a suitably qualified fitter.

Carbon Discharge

The kiln is usually fitted with a discharge chute penetrating at least 200-300mm below the waterline of the quench tank. This 200-300mm penetration is essential and must always be maintained while the kiln is in operation. This waterline provides an air seal to prevent the ingress of oxygen into the discharge chamber and heat tube of the kiln. If oxygen were to enter these parts of the kiln, if would result in uncontrolled combustion of the carbon.

NOTE: If a discharge vibrating sizing screen is being used it is critical to ensure that the end of the kiln discharge chute remains below the water level of the infeed tray/weir of the vibrating screen.

WARNING - Without an air seal on the carbon discharge, carbon loss, fires, injuries to personnel and severe damage to the equipment may result.

External Interface

The electrical control system includes many features that maintain heat control and equipment efficiency including an integrated control system based on direct measurement of heat tube temperature and remote monitoring by site control systems.

The Ansac supplied electrical and burner systems are designed to provide safe operation, however operators of the equipment should never solely rely upon instrumentation. Routine physical inspections of the kiln should always be undertaken during kiln operation.

NOTE: It is recommended that in the event remote operation is implemented on site, physical inspections of the kiln should still always be undertaken during kiln operation.

3 PROCESS AND EQUIPMENT DESCRIPTIONS/RECOMMENDATIONS

The Ansac HC and HK series Carbon Regeneration kiln is designed to regenerate granular activated carbon (GAC). The material is typically in granular form (1-3 mm).

a) Carbon slurry is pumped into the feed hopper (typically 25 w/w%). The hopper serves two functions. It provides a process buffer and permits carbon dewatering prior to regeneration. Sufficient dewatering is critical to create ideal regeneration conditions. If the carbon is too wet (>50 w/w%) the carbon will not reach regeneration temperatures for a sufficient period as most of the heat input generated by the kiln will be devoted to evaporating excess water.

NOTE: Excess water entering the kiln heat tube when it is hot can also cause flash off and superheated steam which can distort and severely damage the heat tube.

Alternatively, if the carbon is too dry, there will be insufficient steam available to 'crack' and vaporize foulants present in the carbon. The steam also serves to create an inert environment within the heat tube which prevents air ingress and this prevents combustion of the hot carbon. The importance of controlling the level of dewatering cannot be overstated when it comes to final carbon regeneration quality.

NOTE: The hopper should have live storage capacity to meet batch size requirements on site. The Ansac HC and HK series kilns are only suited to batch type operation and sufficient time should be allowed for carbon dewatering in the hopper between batches.

b) A dewatering pipe screen is located at the bottom of the hopper to provide dewatering. The purpose of the screen is to maximize surface water drainage (via gravity).

NOTE: The filter inside the pipescreen must always be kept clean.

However, the OEM supplied pipescreen is not maintenance friendly and requires removal of the whole pipescreen assembly to access the filter screen which ultimately equates to kiln downtime.

It is recommended that the OEM unit be replaced with a direct replacement Heat Systems pipescreen assembly with access door and removable filter cartridge. This enables quick removal of a dirty filter and replacement with a clean standby filter between batches without having to remove the housing.

OEM pipescreen

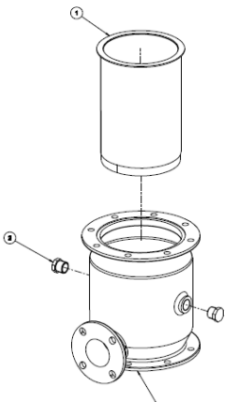

Heat Systems pipescreen

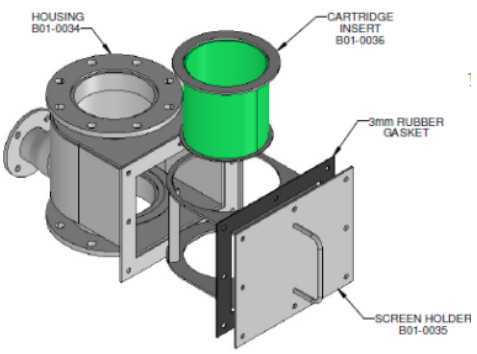

c) A slidegate valve provides isolation between the feed hopper and pre-dryer. When closed, this slidegate holds the carbon in the hopper while the water escapes through the pipescreen filter.

NOTE: The OEM supplied slidegate is manufactured from cast iron and is prone to internal bearing corrosion, blade fracture, internal guide bearing failure and significant water leakage.

It is recommended that the OEM slidegate be replaced with a direct replacement Heat Systems stainless steel and slurry rated slidegate for improved reliability and performance.

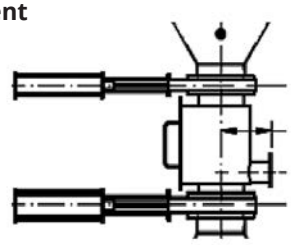

d) A height adjustable throat is provided to feed dewatered carbon via the pre-dryer into the feedscrew of the kiln. (This is to provide for removal of the existing OEM pipe screen assembly for cleaning which is time consuming.)

It is recommended for all HC and HK series kilns that a second Heat Systems supplied slidegate be installed above a Heat Systems pipescreen arrangement (as shown above). This slidegate can be easily installed and then controlled by use of a manual switch able to be independently closed and locked out. This arrangement enables cleaning of the removable Heat Systems pipe screen filter cartridge should it be required in the event carbon is still present in the hopper.

e) The HC and HK series kiln pre-dryer is provided to preheat the carbon prior to the carbon entering the feedscrew. This is done by using a fan to draw hot combustion gases from the kiln exhaust through the carbon as it cascades through the pre-dryer.

NOTE: During independent 3rd party testing, the pre-dryer units have been found to be ineffective as a fuel saving device during kiln operation and are commonly found to cause water ingress and damage to the internals of the HC and HK series kilns.

It is recommended that the pre-dryer be decommissioned in-situ to reduce maintenance costs and prevent kiln damage which results in operational downtime. This is easily done by:

i. Removing the wiring to the fan motor from the PDFC (Pre-dryer fan contactor) inside the electrical control cabinet. The kiln electrical control system will still activate the contactor so the PLC program will not need to be changed and kiln control will not be adversely affected.
ii. Removing the pipe work elbow between the pipework flanges on the side of the pre-dryer leading to the top of the kiln and plugging the hole in the top of the kiln with insulted blanket and a blanking plate.
iii. Placing a blanking plate onto the pipework flange on the side of the pre-dryer.
iv. Fully closing the pre-dryer fan butterfly valve in the pre-dryer pipework at the feed end of the kiln. The pre-dryer temperature thermocouple will measure relevant ambient temperature and not adversely affect running of the kiln.

This modification eliminates the risk of any excess water from the pre-dryer entering the kiln and causing damage to the heat tube, feed seal and insulation of the kiln without detrimentally affecting the performance or operation of the kiln.

NOTE: These issues have been found to occur on a regular basis on sites where the pipescreen filter is not cleaned regularly and becomes blocked. The assumption is made by the operator that the carbon in the hopper has dewatered sufficiently (based on time or a visual check of the pipe screen water outlet) and when they open the slide gate, excess water deluges and overfills the pre-dryer causing overflow into the connecting pipework into the kiln and also down through the feedscrew directly into the heat tube.

IMPORTANT: If this happens while the kiln is also at high temperature, thermal shock can cause irreparable damage to the heat tube!

f) A feed screw transports the carbon into the kiln heat tube. When loaded with carbon, the feed screw also serves to provide a gas seal (preventing air ingress which would result in uncontrolled carbon ignition inside the heat tube). The feed screw is fed by the hopper via the pre-dryer to provide controlled carbon flow. It is fit with a filter screen on the underside to enable final dewatering of the carbon prior to its entry into the kiln.

The dewatering outlet on the underside of the feed screw should be kept separate from any pipework to enable operators to see the amount of water coming from the feedscrew, which must be reduced to a fast drip prior to any operation of the kiln.

The filter inside the feed screw housing must always be kept clean. It is the last point of dewatering available to the carbon. In the event it is blocked, any excess water in the carbon will feed into the heat tube!

NOTE: Heat Systems manufactures replacement feedscrew filter covers with larger dewatering outlets to reduce dewatering time!

g) The heat tube is a rotating tube driven from the discharge end of the Ansac HC and HK series kilns by a gearbox and motor. The main drive motor is further fit with an extended armature (that protrudes from the fan cowling on the motor) which mates with a DC powered emergency drive assembly. Should a power outage occur, the emergency drive shall continue to keep the tube rotating to prevent abnormal distortion of the heat tube and to remove remaining carbon from the tube to the discharge chamber.

NOTE: Heat Systems can manufacture direct replacement emergency drives and heat tubes for the Ansac HC and HK Series kilns.

h) Heat is introduced to the heat tube via burners. These are burners which have common combustion air fans and individual fuel systems and controllers.

NOTE: Heat Systems supplies direct replacement burner system components and provides burner maintenance assistance and advice both on-site and remotely.

i) Once the kiln reaches its set point temperature the burner outputs are modulated to maintain temperature, as dictated by the PID loop in the kiln PLC.

j) Material transfer along the length of the heat tube is facilitated by utilizing a combination of tube rotation and contoured lifters located along the tube length.

k) As carbon travels through the heat tube it is steadily heated. In the initial zone the carbon is dried, releasing all bound moisture. This moisture is driven off and the resultant steam then serves to create an inert environment within the heat tube preventing air ingress and carbon combustion. The steam also serves to crack foulants in the carbon, thereby enhancing the regeneration process. As the carbon progresses down the heat tube, a series of lifters elevate the carbon into the hot steam atmosphere. The lifters are designed to gently lift and cascade the carbon to maximize steam contact. This process provides agitation without excess attrition.

Temperature measurement is sensed on the outside surface of the heat tube. Through our observations, the temperature differential between the heat measured on the outside surface of the heat tube and the temperature of the carbon on the inside of the heat tube can be between 60ºC and 80ºC lower than the tube outside skin temperature. The carbon temperature is critical to the process. If the temperature is too high, gasification of the carbon structure will occur, making the carbon weaker and more prone to attrition losses. If the temperature is too low, insufficient regeneration will result.

The temperature sensing along the heat tube also serves to protect the equipment should excess temperature in the heat tube be detected.

The regenerated carbon exits the heat tube through a scroll which takes a 'slice' of the carbon bed with every rotation. The scroll width is a fixed and customized engineering set-point, and in conjunction with RPM speed, controls residence time of the carbon in the heat tube. The faster the RPM the more 'slices' are taken and the lower the residence time. Similarly, the slower the RPM the higher the residence time will be.

l) As the carbon exits the scroll it falls into the discharge chamber via a series of holes within the heat tube. The lower half of the discharge tank is water cooled to reduce the carbon temperature before it exits to a quench tank below.

m) The carbon then enters the quench tank via a kiln discharge chute. It is critical that the water level in the quench tank is maintained above the bottom of the chute by at least 200mm (and no more than 300mm). The quench tank water not only serves to cool the carbon, but it also provides an air lock to prevent air entering the discharge end of the kiln. If the water level drops below the bottom of the chute, air ingress will result, and uncontrolled combustion of the carbon will occur resulting in a safety risk to personnel and damage to the kiln equipment. A temperature sensor is incorporated into the discharge chamber to shut the kiln down if excess temperature is detected in this area.

NOTE: At no time while the kiln is hot should any access to the internal of the discharge chamber be attempted by personnel through the access hatches. The resulting air ingress could cause uncontrolled combustion of the carbon resulting in potential personnel injury or death.

n) The off-gas emanating from the carbon during kiln operation will primarily consist of steam and light volatile foulants. This gas exits out of the holes in the heat tube, into the discharge chamber and is then drawn into the kiln flue gas ductwork via an internal "steam pipe", combining with the hot flue gases exiting the combustion chamber.

o) A discharge seal is installed around the heat tube in the discharge chamber. The seal is designed to allow for the radial and axial expansion of the heat tube during operation and prevents off-gas from entering the combustion chamber.

p) Controlled shutdown involves reducing the feed rate towards zero and removing the energy source (i.e. switching off the burners). During this period there will be a quantity of carbon within the heat tube. The heat tube will remain rotating until the temperature falls below the relevant heat tube shutdown safety setpoint temperature. At this point most of the carbon will have exited the heat tube.

4 MAINTENANCE RECOMMENDATIONS AND INSTRUCTIONS

4

The Ansac HC and HK Series Carbon Regeneration kiln requires regular maintenance. There are numerous maintenance tasks that require attention at various intervals.

Heat Systems provides technical support for several Ansac HC and HK Series kilns worldwide.

4.2 Maintenance Table

The following table describes recommended various regular maintenance tasks required for the kiln and the recommended frequency for the tasks to be actioned.

		Frequency				
Item	Task	Daily	Weekly	Monthly	Quarterly	Annually
1	Grease feed screw auger seal		X			
2	Visual check heat tube feed end gland packing ring to feedscrew housing concentricity			X		
3	Clean feed screw dewatering screen filter	X*				
4	Check feed screw gearbox oil					X
5	Check feed screw auger				X	
6	Check heat tube/combustion chamber feed cloth seal			X		
7	Check heat tube/discharge chamber mechanical seal			X		
8	Check feedscrew housing to yoke gland packing seal			X		
9	Check seals of both heat tube drive gearboxes				X	
10	Check oil of both heat tube drive gearboxes					X
11	Check heat tube thermocouples and holders			X		
12	Check feed end yoke support bearings	X				
13	Grease feed end yoke bronze bush (HK510/640/870 kilns)	X				
14	Check feed yoke frame internal support bearings (HK1100/1300/1500 kilns)	X				
15	Clean pipescreen dewatering filter screen		X*			
16	Visual check heat tube alignment		X			
17	Inspect and verify burners and burners operation				X	
18	Remove discharge chamber access hatches and check internal condition of discharge chamber		X			
19	Remove external steampipe elbow on discharge and check internals of steam pipe along inside of kiln for contamination			X		
20	Remove discharge chute and check internal for contaminants and restrictions				X	
21	Temperature test and map kiln body			X		
22	Remove burners and visually inspect internal walls of lower half of combustion chamber				X	

4.3 Maintenance Table

The following table details each of the maintenance tasks and the activities required to complete each task.

Item	Task	Details
1	Grease feed screw auger seal	Grease nipple located on gearbox mounting plate.
2	Visual check heat tube feed end gland packing ring to feedscrew housing concentricity	From outside of any kiln safety guards, visually observe whether the gap between gland packing ring and feedscrew housing is consistent while heat tube is turning. Check for excessive steam emissions if kiln is operating. Realign heat tube or yoke as necessary. Replace gland packing.
3	Clean feed screw dewatering screen filter	Remove feed screw bottom cover plate and remove and clean screen. Check O-ring seal. Replace, as necessary. ***NOTE: If there is evidence of severe contamination of filter increase frequency of cleaning to daily or "per batch"**
4	Check feed screw gearbox oil	Undo gearbox fill plug. Check oil condition. Top up or replace oil as necessary.
5	Check feed screw auger	Disconnect gearbox mounting assembly. Remove and inspect auger for damage or wear to flights. Repair or replace as necessary.
6	Check heat tube/combustion chamber feed cloth seal	Check seal for excessive wear and gaps. Check for excess hot gas emissions during kiln operation. Replace seal as necessary when kiln is cool.
7	Check heat tube/discharge chamber mechanical seal	When kiln is cool, remove discharge chamber access hatch covers. Check steel ring and cloth seal (HK870/1100/1300/1500 kilns) for physical damage and gaps. Replace seal parts as necessary when kiln is cool.
8	Check feedscrew housing to yoke gland packing seal	Check seal for excessive wear and gaps. Check for hot gas emissions during kiln operation. Replace seal as necessary when kiln is cool.
9	Check seals of both heat tube drive gearboxes	Check for oil leaks or weeps. Replace seals as necessary when kiln is cool.
10	Check oil of both heat tube drive gearboxes	Check gearbox oil level window or undo gearbox fill plug. Check oil condition. Top up or replace oil as necessary.
11	Check heat tube thermocouples and holders	Remove holder complete with thermocouple. Inspect tip of thermocouple. If worn replace thermocouple. Check holder. If insulation missing or tube damaged, replace holder. **NOTE: Insert thermocouple with tip 3-5mm inside the end of the thermocouple holder to prevent contact of thermocouple tip with heat tube (refer Section 4.5).**
12	Check feed end yoke support bearings	Check bearings for tightness, lack of rotation. Replace as necessary.

Item	Task	Details
13	Grease feed end yoke bronze bush (HK510/640/870 kilns)	Check for misalignment, heat damage or excessive wear. Replace as necessary. Check yoke for smoothness of operation when tube is turning. Apply grease as necessary.
14	Check feed yoke frame internal support bearings (HK1100/1300/1500 kilns)	Check bearings for tightness, lack of rotation. Replace, as necessary.
15	Clean pipescreen dewatering filter screen	Empty hopper and isolate feed system. Remove pipescreen and clean as necessary. ***NOTE: If there is evidence of severe contamination of filter increase frequency of cleaning to "per batch"**
16	Visual check heat tube alignment	From outside of safety guards, while kiln is operating visually check alignment of heat tube at discharge end. Check for eccentric movement of heat tube drive coupling at discharge end. Check for any binding or interference of discharge gland packing ring on drive coupling. If heat tube appears misaligned, stop kiln, allow to cool, and lock out. Adjust tube alignment, as necessary. Replace gland packing around drive coupling.
17	Inspect and verify burners and burners operation	While kiln is operating, check all burners are running. Check for any unusual noises or emissions from burners. Check for any unusual emissions from kiln exhaust stack. Adjust burners as necessary.
18	Remove discharge chamber access hatches and check internal condition of discharge chamber	Check for distortion of water jacket and for water leaks. Check for build-up of contaminants around steam pipe and clean as necessary. Check for build-up of contaminants and carbon in lower chamber and discharge area and clean as necessary. (Hint: Use metal scraper with chain attached to handle which must be secured to anchor outside of chamber to prevent possible dropping of scraper into quench tank) **NOTE: Before cleaning discharge area remove the discharge temperature thermocouple and re-install when cleaning complete.**
19	Remove external steampipe elbow on discharge and check internals of steam pipe along inside of kiln for contamination	Check for build-up of contaminants inside elbow and clean as necessary. Check for build-up of contaminants in steam pipe and clean as necessary (Hint: use long pole with half round plate to suit internal pipe diameter. Insert down pipe with plate orientated to top and then rotate and scrape bulk of contaminants back out of pipe).
20	Remove discharge chute and check internal for contaminants and restrictions	Check for build-up of contaminants inside chute and clean as necessary.
21	Temperature test and map kiln body	Using suitable equipment such as an infrared thermal gun scanner or thermal imaging camera, scan the outside shell of the kiln body.
22	Remove burners and visually inspect internal walls of lower half of combustion chamber	Remove burners and through burner holes visually inspect internal insulation of combustion chamber of kiln using suitable equipment (eg. digital camera) .

4.4 Lubrication Schedule

The following is a schedule of lubricants used in the carbon regeneration kiln.

Item	Lubricant	Frequency
Feed screw gearbox	ISO VG 150-220	Life
Main drive gearbox	ISO VG 150-220	Life
Feed screw auger seal	High Temperature Lithium Grease	Weekly
Heat tube feed end yoke bush and shafts or support bearings	High Temperature Lithium Grease	Daily

The OEM recommends Caltex Liplex ll high temperature lithium grease. On site any high temperature lithium grease will be satisfactory.

Replacement oil is only necessary when the gearbox is disassembled for servicing. Should leakage occur ensure that only the same style of oil is used to top up the gearbox oil level.

WARNING! - Care should however be taken never to use synthetic and mineral oil in a mixed application.

During any gearbox repair, all lubricant should be drained completely, and the gearbox flushed to remove all traces of old lubricant and possible metal/foreign objects. Although some items are noted as being lubricated for life, it is important that, should a leakage occur, the problem should be investigated, and repaired. The equipment should then be re-filled/re-packed with the appropriate fresh lubricant.

4.4.1 Recommended oils

	INDUSTRIAL INSTALLATIONS			MOBILE MACHINES	
	ISO standards with EP characteristics			SAE standards with API GL5 characteristics	
Ambient Temperature	**-10°C / +30°C**	**+10°C / +45°C**	**-20°C / +60°C**	**-20°C / +30°C**	**+10°C / +45°C**
BP-MACH	ENERGOL GR XP 150	ENERGOL GR XP 220	ENERSYN HTX220	HYPOGEAR EP	HYPOGEAR EP
CASTROL	ALPHA SP 150	ALPHA SP 220	ALPHASYN PG 150	HYPOY	HYPOY
MOBIL	MOBILGEAR 629	MOBILGEAR 630	SHC 630	MOBILUBE HD	MOBILUBE HD
SHELL	OMALA EP 150	OMALA EP 220	TIVELA OIL SA	SPIRAX HD	SPIRAX HD
TOTAL	CARTER EP 150	CARTER EP 220		TRANSMISSION TM	TRANSMISSION TM

4.5 Thermocouple and Level Sensor Installation Instructions

The following descriptions outline the correct methods for installing the kiln thermocouples and the carbon level sensing probe.

WARNING! – Incorrect thermocouple and level probe installation may result in incorrect readings. This may lead to unsafe operation of the kiln. The kiln should be shutdown, isolated and cold before any work is undertaken.

Heat Tube Thermocouples:

i. Screw the brass compression fitting of the new thermocouple into the rear of the holder tube of the new thermocouple holder.

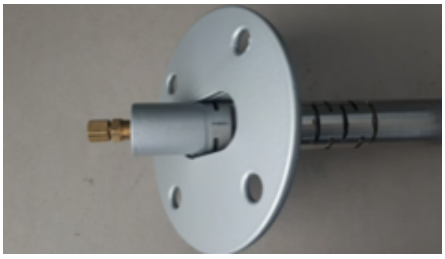

ii. Insert the thermocouple through the brass fitting into the new holder and push it through the holder tube until the tip of the thermocouple is flush with the face of the slash cut end of the holder tube.

iii. Wrap some electrical tape around the thermocouple shaft flush with the face of the brass fitting on the thermocouple holder side.

iv. Withdraw the thermocouple until the tape is 3-5 mm from the face of the brass fitting.

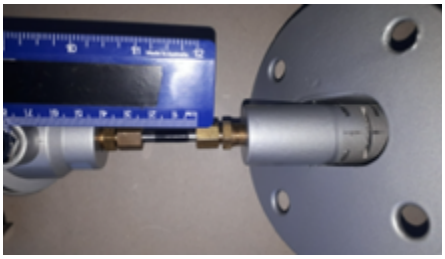

v. Tighten the brass compression fitting to lock the thermocouple in position.

vi. Check that the tip of the thermocouple is 3-5mm inside the slash cut face of the end of the thermocouple holder tube. (This is necessary to ensure that the tip of the thermocouple does not touch the heat tube during operation.)

vii. Wrap a small amount of thermal blanket around the thermocouple holder in location of the flange. (This is to prevent heat and combustion chamber fumes from escaping through the existing hole and protects the wiring).

viii. Insert the thermocouple holder complete with the blanket and thermocouple, into the kiln and make sure the pointed tip is to the top.

ix. Bolt the thermocouple in place.

x. With the holder fully bolted down and the holder tube resting on the heat tube outer skin inside the kiln, check to make sure the thermocouple holder tube can pivot downwards to lift the tip off the heat tube and that the tube tip can fall freely back onto the heat tube when released.

NOTE: The holder tube should be able to pivot up and down with approximately 5˚ of free play.

xi. When firing the kiln up afterwards, make sure there is no heat or are no fumes leaking from the hole.

xii. Connect the wiring and check that the response from the thermocouple is active and that the readout is accurate.

Discharge Chamber Thermocouple:

The kiln should be shutdown, isolated and cold before any further work is undertaken.

Insert an ETK100-1 thermocouple into the fitting on the discharge lower body until the connector box is 50mm from the compression fitting.

Tighten the compression fitting, locking it in place.

It is recommended that the tip of the thermocouple only penetrate 30-50mm into the discharge chute to minimise the risk of carbon or contaminants hanging on the thermocouple.

Carbon level sensor:

The carbon level sensor is usually installed by the OEM horizontally in the feed throat of the pre-dryer during manufacture. This installation is prone to carbon "hanging" on the level probe and providing false readings. The result is often found that a false "carbon available" signal is sent to the kiln during kiln operation. In such instances, the feedscrew continues to run when the pre-dryer empties and air enters the heat tube through the feed screw. This air then causes uncontrolled combustion of the hot carbon.

It is recommended that the carbon low level probe be relocated and installed vertically into the top of the pre-dryer lid midway between the inlet throat and the outer edge of the lid in a line 90° to the centre line of the kiln.

NOTE: The pre-dryer lid is double skinned with insulation installed between the inner and outer skin.

- The Omron BS-01 level probe has M18 x 1.5mm thread.
- Drill a 16.8mm hole through the top skin and lower skin of the pre-dryer lid. Tap the top hole with an M18 x 1.5mm thread tap.
- Weld a 5mm stud to the lid near the hole to use as an Earth.
- Install a longer 350mm stainless steel rod into the BS-01 holder

NOTE: The retaining screws need to be made shorter to allow the screw heads to fit through the hole in the lid.

Fit electrical heat shrink over the holder retaining screws and along the rod to 50mm from the tip. (This is to ensure that the holder and the rod do not touch the inside skin of the lid if the rod is deflected by carbon inside the pre-dryer when the kiln is operating)

Connect the signal wire to the level probe and earth wire to the stud. Check and verify level sensor operation.

Heat Systems Group Pty Ltd appreciates any communication and feedback from users of any type of carbon regeneration kilns (not only the Ansac HC and HK Series kilns). This, combined with our own extensive knowledge and our experience from working on the equipment, always enables us to successfully provide informed and quality support to our clients worldwide.

NOTE: We also have knowledge and experience on other OEM manufactured Carbon Regeneration kilns (Metso, Nutec Bicklety, etc) and many other types of Thermal processing equipment.

For any assistance or any feedback,
please contact us on info@heatsystems.com.au

HEAT SYSTEMS

Ansac HC – HK Series Carbon Regeneration Kiln

Supplementary Manual
Preventative Maintenance

info@heatsystems.com.au
heatsystems.com.au

HEAD OFFICE - MELBOURNE
45 Merri Concourse, Campbellfield
Victoria 3061
Australia
Ph. +61 3 9357 7393

PERTH
21 Andrew Foord Way, Picton
Western Australia 6229
Australia
Ph. +61 8 6465 4198

VIETNAM
117A Binh Thoi Street
Ward 11 District 11
Ho Chi Minh City
Ph. 0011 84 123 800 5379